WEEKE
PRIMARY SCHOOL
WINCHESTER

ARBORICULTURAL IMPACT ASSESSMENT AND METHOD STATEMENT

25th April 2013

Our Ref: JSL2080_770

RPS
Lakesbury House
Hiltingbury House
Chandlers Ford
Hampshire
S053 5SS

Tel: 02380 810440
Fax: 02380 810449
Email: rpsso@rpsgroup.com

QUALITY MANAGEMENT

Prepared by:	**Chris Chambers - Arboriculturalist**
Authorised by:	**Neil Jones**
Date:	**29th May 2013**
Project Number/Document Reference:	**JSL2080_775**
Status:	**For Planning**
Revision:	**A**

COPYRIGHT © RPS

The material presented in this report is confidential. This report has been prepared for the exclusive use of Hampshire County Council and shall not be distributed or made available to any other company or person without the knowledge and written consent of Hampshire County Council or RPS.

CONTENTS

EXECUTIVE SUMMARY 1
1 INTRODUCTION 2
2 ARBORICULTURAL IMPACT ASSESSMENT 3
3 DEVELOPMENT WORKS 5
4 TREE PROTECTION 7
5 ARBORICULTURAL CHECKLIST 9

APPENDICES:

Appendix 1: Tree protection plan

Appendix 2: Tree Works

Appendix 3: Tree survey schedule

Appendix 4: Example Tree Protection Barriers

Appendix 5: Example arboricultural site register

Appendix 6: Construction Exclusion Zone (CEZ) Signage

EXECUTIVE SUMMARY

- RPS was commissioned by Hampshire County Council to assess the arboricultural implications and prepare an Arboricultural Method Statement, Arboricultural Impact Assessment and accompanying Tree Protection Plan in relation to proposed development of land within the grounds of Weeke Primary School, Winchester in Hampshire with particular reference to proposed external works in the proximity of T1 (Oak) and T11 (Strawberry tree).

- The Arboricultural Method Statement and Tree Protection Plan were produced following a Tree Survey carried out by RPS in November 2012. The findings of the tree survey are documented in RPS report JSL2080_770. The original survey schedules JSL2080_750 are to be found in Appendix 3 of this document. For the purpose of this report, the site was subsequently revisited on the 25th of April 2013.

- All documents are in accordance with the requirements set out in BS5837: 2012 'Trees in relation to design, demolition and construction – Recommendations'.

- A Tree Protection Plan JSL2080_710 has been prepared by RPS utilising the surveyed information compiled within the tree survey.

- The installation of an Amphitheatre will require the removal of two trees a Norway Maple (T10) of low amenity value and a London Plane of moderate amenity value. The development works will directly impinge on the Root Protection Areas (RPA) of a neighbouring Strawberry Tree (T11) which is to be retained.

- The proposed realignment of the car parking on the north-east of the site will be undertaken within the RPA of an Oak (T1) which is to be retained.

- Construction activities have the potential to disturb the root system and damage tree canopies and the during construction phase the trees must be monitored and carefully managed in accordance with the checklist in section 5 of this document.

- Any tree works must to be in accordance with BS 5837:2012 'Trees in relation to design, demolition and construction', BS 3998:2010 'Recommendations for Tree Work' (copies can be obtained from BSI Tel: 020 8996 7400 www.bsi.global.com) and The Arboricultural Association Guidance Note 8: Standard Conditions of Contract and Specification (2009) (copies can be obtained from the AA Tel: 01242 522152, www.trees.org.uk).

- All construction works within the Root Protection Area (RPA) of any retained tree shall be completed with due regard to APN 12 'Through the Trees to Development' and BS5837:2012 'Trees in relation to design, demolition and construction'.

1 INTRODUCTION

1.1 RPS was commissioned by Hampshire County Council to assess the arboricultural implications and prepare an Arboricultural Method Statement, Arboricultural Impact Assessment and accompanying Tree Protection Plan in relation to proposed development of land within the grounds of Weeke Primary School, Winchester in Hampshire with particular reference to proposed external works in the proximity of T1 (Oak) and T11 (Strawberry Tree).

1.2 The commission follows a tree survey carried out in November 2012. This report was informed by this tree survey produced by RPS in December 2012 and the schedules JSL2080_750 are to be found in Appendix 3 of this document.

1.3 The purpose of this report is to:

- Assess the appropriateness of the proposed tree removal that is required to achieve the proposed development and make recommendations for mitigation where appropriate.
- Assess to what extent the proposed development will impact upon the health and vitality of the retained trees on site and make recommendations for mitigation where appropriate.
- Specify measures for the protection of trees throughout development of the site and identify any necessary predevelopment tree works. Provide additional arboricultural information and advice in relation to the protection of trees throughout the development of the site.
- Provide a Tree Protection Plan to detail the proposed protective measures to be taken in respect of the trees during development of the site.

1.4 The Tree Protection Plan JSL2080_710 identifies the following:

- Trees to be retained;
- Alignment and design of protective fence;
- Root Protection Area (RPA) of trees;
- Methods of construction / implementation within RPA of retained existing trees

1.5 The Arboricultural Method Statement should be made available to all relevant site operatives prior to and throughout the demolition and construction process, so they understand the scope and importance of the tree protection measures.

1.6 This report was carried out by Chris Chambers BSc Arboriculture (Hons), Professional Member of the Arboricultural Association and Chartered Member of the Landscape Institute of RPS Group PLC.

2 ARBORICULTURAL IMPACT ASSESSMENT

Introduction

2.1 Trees have finite energy reserves, developed each year throughout the growing season, which are utilised for biological processes such as growth and defence against pests or diseases throughout the following year.

2.2 Any development in proximity to trees has the potential to cause harm to those trees unless control measures are identified and acted upon; as such it is essential to consider the relationship between the proposed development and the retained trees to identify what precautions are necessary, proportionate and appropriate.

2.3 Development has the potential to impact upon the above ground and below ground parts of trees. Whilst some damage that can occur, such as physical damage to the trees stems and branches from machinery movements, is clearly visible the impact from other aspects of work common on development sites which can have a significant effect upon the continued health of trees are not always immediately evident.

2.4 Damage that is not immediately evident but which can cause long term harm to retained trees includes things such as damage to the soil structure by compaction causing root damage and levels changes altering the water table and affecting moisture availability.

2.5 To minimise the potential for harm to occur to retained trees all works must be carried out with regard to the Tree Protection measures detailed within this report.

2.6 In general it can be seen that, by adopting appropriate methods of working, precautionary and protective measures, significant harm to retained trees can be avoided.

2.7 In particular the establishment of a Construction Exclusion Zone (CEZ) by erection of Tree Protection Fencing will minimise the potential for harm to occur to retained trees.

2.8 The retention and protection of the significant vegetation will assist in assimilating the proposed development into the wider landscape and offer longer term tree cover. Furthermore, redevelopment of the site may offer an excellent opportunity to actively manage the retained vegetation and accordingly we recommend restorative tree works be undertaken. This will further improve the amenity value and landscape setting of the site and increase the useful life of the trees.

Brief Description of Proposed Development

2.9 The proposed development of the site consists of the expansion of existing school facilities including associated enhanced external play and outdoor learning environment, to include an amphitheatre to the west of the school.

Tree Retention and Removal

2.10 The installation of an amphitheatre at the western end of the school directly accessible from the new classrooms and the main playground, will require the removal of two trees on an area of artificially raised land, a Norway Maple (T10) of low amenity value and a London Plane (T12) of

moderate amenity value. It is recommended that the trees are removed prior to commencement of the development.

Proposed works within the Root Protection Area

2.11 The actual footprint of the Amphitheatre will be located within the Root Protection Area of approximately 2% of the Strawberry Tree (T11). To allow the safe construction, the alignment of the protective fencing shall be no more than 500mm from the edge of the works. Taking the additional area required for safe construction into the consideration approximately 9% of the RPA will be affected.

2.12 The construction of the Amphitheatre, has been designed to minimise the impact of construction methods on the neighbouring tree using timber sleepers laid on prepared hardcore foundation strips to form a series of low timber steps with an overall height of 1.5m along the south elevation. The finished level of the upper step in the vicinity of T11 will marry-in with and be equal to the existing ground level therefore there will be no level changes within the retained RPA of the tree. A shallow cutting will be required during construction between the amiptheatre and the tree to install the timber sleeper steps and this will be in the form of a shallow batter in the chalk subsoils to allow a safe working environment. The batter will be then back filled with as dug material and made good to tie in with existing levels. Given the proposed construction methods and the need to follow the temporary tree protection measures outlined in this report, it is not considered that the works will significantly affect the continued health and vigour of T11.

2.13 The proposed realignment of the car parking on the north-east of the site will be undertaken within the RPA of an Oak (T1) which is to be retained. These works consist of the enlargement of an existing area of hardstanding and associated concrete kerbs with the only level changes associated with the depth of construction. With the inclusion of an allowance to accommodate safe construction the proposed works will be located within approximately 14% of the Root Protection Area. Given the degree of impingement and the need to follow the temporary tree protection measures outlined, we do not expect this to significantly affect the stability or general health of the tree.

Proposed works within the Canopy

2.14 Where the Root Protection Areas for retained trees do not extend to the edge of existing canopy spreads to minimise the potential for harm to occur to retained vegetation a Construction Exclusion Zone (CEZ) will be created, by the erection of protective fencing as detailed on the Tree Protection Plan JSL2080_710.

2.15 The Strawberry Tree (T11) is of low growing character with a finely branched crown. The proposed works extend into the north-eastern side of the canopy. It is possible that those parts of the trees extending beyond the RPA fencing may sustain damage during construction. We recommend that the protective fencing be installed in such a way that the canopy is carefully pushed back away from the works and held in place by the fence panel. The supporting scaffold should be installed followed by the panels, secured by pushing the canopy directly away from the construction zone. On completion of the works the canopy should be ‘released’. Any damage sustained during this operation shall be carefully trimmed under the direction of the Landscape Architect.

2.16 The proposed realignment of the car parking will require that a working area is established within the canopy spread of the Oak (T1). This is not expected to cause a conflict with the tree as it has sufficient clear stem height. However, should any conflict arise this could be addressed by undertaking localised access facilitation pruning works under the direction of the Landscape Architect which would be of a minor extent and would not be detrimental to the continued establishment of the tree.

2.17 No services are proposed within the Root Protection Areas of trees to be retained.

3 DEVELOPMENT WORKS

Predevelopment Tree Pruning Works

3.1 The specified tree works (Appendix 2) should be undertaken prior to commencement of the proposed development.

3.2 The low hanging canopies of trees are susceptible to damage during construction work. As such any required remedial tree works to the canopy must be undertaken in advance of any construction works to avoid undue damage to the canopy by plant / machinery etc. Tree works should maintain a natural shape and balance to the canopy of the tree.

Standard of Work

3.3 All tree works shall be carried out in accordance with BS3998:2010 Tree Work - Recommendations and latest arboricultural best practice. All tree work must be carried out by suitably qualified, competent and insured arboricultural contractors.

3.4 All green and woody waste generated by the tree works shall be removed from site and disposed of in an environmentally sustainable manner.

3.5 Prior to the commencement of any tree works an appropriate risk assessment must be produced by the contractor (and made available) to describe the measures required to fulfil the statutory safety obligations. It should aim to identify and prioritise the necessary control measures and precautions

Timing of Works

3.6 All tree works shall be completed prior to commencement of any construction works on the site.

3.7 All works shall be timed to have regard to the phenological cycles of protected species that are associated with trees; notably birds and bats.

3.8 Nesting birds are protected by law and any removal / tree works should not be carried out during the bird nesting season (generally accepted as March-August inclusive). Should any vegetation be identified for removal during this period, then an ecological inspection would be required to check that no nesting birds are present. Should checks reveal nesting birds the vegetation must remain until September or until an ecologist has certified that the fledglings have left the nest. A visual inspection for bats should also be carried on mature / ivy clad trees prior to commencing any operations.

Tree Protection Fencing

3.9 Prior to the commencement of any site works the protective fencing is to be erected in accordance with the locations set out on the Tree Protection Plan JSL2080_710

3.10 Once the protective fencing is in place it must remain *in situ* throughout the course of the development until the completion of all site works.

3.11 Copies of the Tree Protection Plan shall be placed in the site office for reference by all site staff. The protective fencing barrier is to be constructed in accordance with the specification detailed in Appendix 4.

3.12 Signs detailing the purpose of the protective fencing shall be attached to the fencing at 10m intervals. Such signs must be weatherproof and shall be substantially in the form of the specimen illustrated in Appendix 6. Signs must be replaced as necessary should they be removed or become illegible.

3.13 Following erection of the protective fencing and prior to commencement of the development it is recommended that an inspection of the site, by either the Council's Tree Officer or the arboricultural Consultant is arranged to confirm fencing has been installed in accordance with the Tree Protection Plan and any relevant conditions that may be attached to a grant of planning consent for the development.

4 TREE PROTECTION

Tree Protection

4.1 The RPA roughly equates to the spread of a tree canopy. This area or an area equivalent to a radius 12 times the stem diameter of the tree at 1.5m above ground level, whichever is the greater (capped at 15m), should be designated as the RPA. Where any part of a trees crown extends passed the calculated RPA, the protective measures should be extended to protect the trees branched framework. Where possible it will be fenced-off with suitable barrier and protected in accordance with BS5837: 2012 (refer to Appendix 4).

4.2 The tree protection measures shall be inspected and monitored during the course of the construction works, to ensure its compliance with the Tree Protection Plans JSL2080_710. The Client shall ensure that at regular intervals the protective measures are inspected to ensure that they are not damaged or been removed.

4.3 The Client or their nominated agent shall note areas which are not in accordance with the Tree Protection Plans and these areas shall be recorded and reinstated immediately. Where any areas of protective fencing cannot be reinstated for reasons unknown, consultation with an arboriculturalist should be sought immediately.

Construction Exclusion Zone

4.4 The Construction Exclusion Zone (CEZ) as defined by the protective fence line shall be regarded as sacrosanct, and the protective fencing shall not be moved or taken down at any time. Within the Construction Exclusion Zone there must be No mechanical digging or scraping, No alteration to existing ground levels including soil stripping, No earthworks, No handling or discharge of any chemical substance, concrete washings or of any fuels.

4.5 Furthermore vehicular or pedestrian access and the storage of any materials is prohibited within the Construction Exclusion Zone.

4.6 Additionally no materials that may contaminate the soil such as concrete mixings, diesel oil and vehicle washings shall be discharged within 10m of the stem of any tree and no fires shall be lit within 10m of the maximum extent of a trees crown.

New Hard Surfaces within Root Protection Areas

4.7 The construction of new hard surfaces around trees has the potential to cause soil compaction, to cause root damage and to reduce nutrient and moisture availability to tree roots to the detriment of tree health and vitality.

4.8 To minimise harm occurring as a result of such works where installation of new hard surfacing is proposed within the Root Protection Areas of retained trees measures need to be adopted to minimise disturbance or damage to the roots and to maintain ingress of water and air to the root zone.

4.9 These measures include:

- Carefully reducing levels by hand to avoid damage to the bark of larger roots which should be further protected from drying out whilst exposed;
- The use of permeable surface treatments including grass and planting which do not interfere with air exchange to the roots for replacement fill or as a sub-base;

Site Compounds and Materials Stores

4.10 To prevent harm occurring to trees the provision for materials storage, site offices, deliveries and other related activities will be situated on an existing area of hardstanding outside the temporary tree protection area. This location is shown on the Tree Protection Plan JSL2080_710

Monitoring

4.11 Following erection of the protective fencing and prior to commencement of the development an inspection of the site, by either the Council's Tree Officer or the Arboricultural Consultant, should be arranged to confirm fencing has been installed in accordance with the Tree Protection Plan.

4.12 Monitoring of tree protection measures will be carried out on site on a regular basis by the contract administrator to ensure tree protection is upheld at all times or reviewed if necessary in consultation with the Council's Tree Officer or the Arboricultural Consultant.

Reporting

4.13 Should any arboricultural issues become apparent during the works the site manager should immediately contact the Arboricultural Consultant or the Council's Tree Officer for advice upon how to proceed.

5 ARBORICULTURAL CHECKLIST

Ref	*Work Activity*	*Schedule of Works*	*Refer*	*Recommendations*
General site works and tree related operations				
01	Pre-start site meeting	Pre-start site meeting with LPA tree officer, site manager, client representative and arboriculture consultant to agree scope of any works, where required.		
02	Protect trees to be retained	Barriers should be fit for the purpose of excluding construction activity, and should remain rigid and complete. Barriers are to be located in accordance with RPS Tree Protection Plans.	BS 5837:2012 Trees in relation to design, demolition and construction: Figure 2 & 3 RPS Tree Protection Plan JSL2080_710	Ongoing monitoring by appointed person
03	Protective fencing to be inspected by LPA	CA to give LPA at least 2 working days notice of the erection of the temporary protective fencing.		Appointed person to contact LPA prior to completion of fencing.
04	Maintain the temporary protective fencing	CA to ensure the temporary protective fencing is maintained throughout the entire construction period and record any breach of the tree protection.	BS 5837:2012 Trees in relation to design, demolition and construction Fig:2 & 3 RPS Tree Protection Plan JSL2080_710	Appointed person responsible for arboricultural protection measures shall monitor fencing **monthly**, recording details
05	Removal of arisings	Removal of all arisings off site unless instructed otherwise by the CA. Fires are NOT permitted on the site	Arboricultural Association Standard Conditions Of Contract And Specifications For Tree Works (2008) Edition BS 3998:2010 Tree Work	Ongoing monitoring by appointed person

Ref	Work Activity	Schedule of Works	Refer	Recommendations
Specific tree and construction works				
06	Removal of deadwood / hanging deadwood	Removal of dead, dying or diseased branchwood, broken branches, or stubs left from previous tree surgery operations together with unwanted objects such as fungal fruit bodies, ivy and / or other climbing plants, nails, redundant cable bracing and wind-blown rubbish from the tree and any such debris from any cavities within the tree.	Arboricultural Association Standard Conditions Of Contract And Specifications For Tree Works (2008) Edition BS 3998:2010 Tree Work	All tree work should be carried out by a suitably tree qualified tree surgeon, preferably an Arboricultural Association approved contractor.
07	Crown lifting	Removal of all soft growth and branches or parts thereof which are below or which extend below 4.5 – 5.0m from ground level.	Arboricultural Association Standard Conditions Of Contract And Specifications For Tree Works (2008) Edition BS 3998:2010 Tree Work	All tree work should be carried out by a suitably tree qualified tree surgeon, preferably an Arboricultural Association approved contractor.
08	Works within the Root Protection Area (RPA)	Adopt hand dig methods for reducing levels to avoid damage to roots. Where limited root pruning is unavoidable it should be made at a suitable place within the root system, avoiding damage to surrounding tissue. Final pruning cuts shall be made at right angles to the axis of the root. The final cut wound should be smooth and as small as possible, free from ragged torn ends. Where root pruning is required to roots over 25mm in diameter, works should be overseen by a suitably qualified Arboriculturalist. Any root pruning should be completed in accordance with BS 3998:2010.	Arboricultural Association Standard Conditions Of Contract And Specifications For Tree Works (2008) Edition BS 3998:2010 Tree Work APN 12 'Through the Trees to Development' RPS Tree Protection Plan JSL2080_710	All tree work should be carried out by a suitably tree qualified tree surgeon, preferably an Arboricultural Association approved contractor.

Ref	Work Activity	Schedule of Works	Refer	Recommendations
12	New surfacing works with Root Protection Areas (RPA)	All proposed surfaces within RPA areas shall be completed in a 'no dig' style, where existing soil levels are retained and no positive soil excavation shall occur at all.	BS 5837:2012 Trees in relation to design, demolition and construction: Section 7 Tree Work APN 12 'Through the Trees to Development' RPS Tree Protection Plan JSL2080_710	Engagement of a engineer will be required
13	Works within the Root Protection Area (RPA)	The underlying soil shall be levelled by the addition of good quality top soil to BS3882:2007 (typically 150mm depth maximum). Hand tools only shall be used for any levelling works which will not disturb the underlying soil.	BS3882:2007 - The British Standard for Topsoil	Ongoing monitoring by appointed person
14	Soft landscape works within the Root Protection Area (RPA) (If required)	Heavy mechanical soil cultivation techniques are not to be carried out within the RPA. Any cultivation should be carried out by hand or pedestrian controlled light machinery to minimise damage to tree roots. Existing ground levels within the RPA should be maintained.	BS 5837:2012 Trees in relation to design, demolition and construction: Section 8 RPS Tree Protection Plan JSL2080_710	

APPENDIX 1

Tree Protection Plan

JSL2080_710

© 2012 RPS Group

Notes

1. This drawing has been prepared in accordance with the scope of RPS's appointment with its client and is subject to the terms and conditions of that appointment. RPS accepts no liability for any use of this document other than by its client and only for the purposes for which it was prepared and provided.
2. If received electronically it is the recipients responsibility to print to correct scale. Only written dimensions should be used.

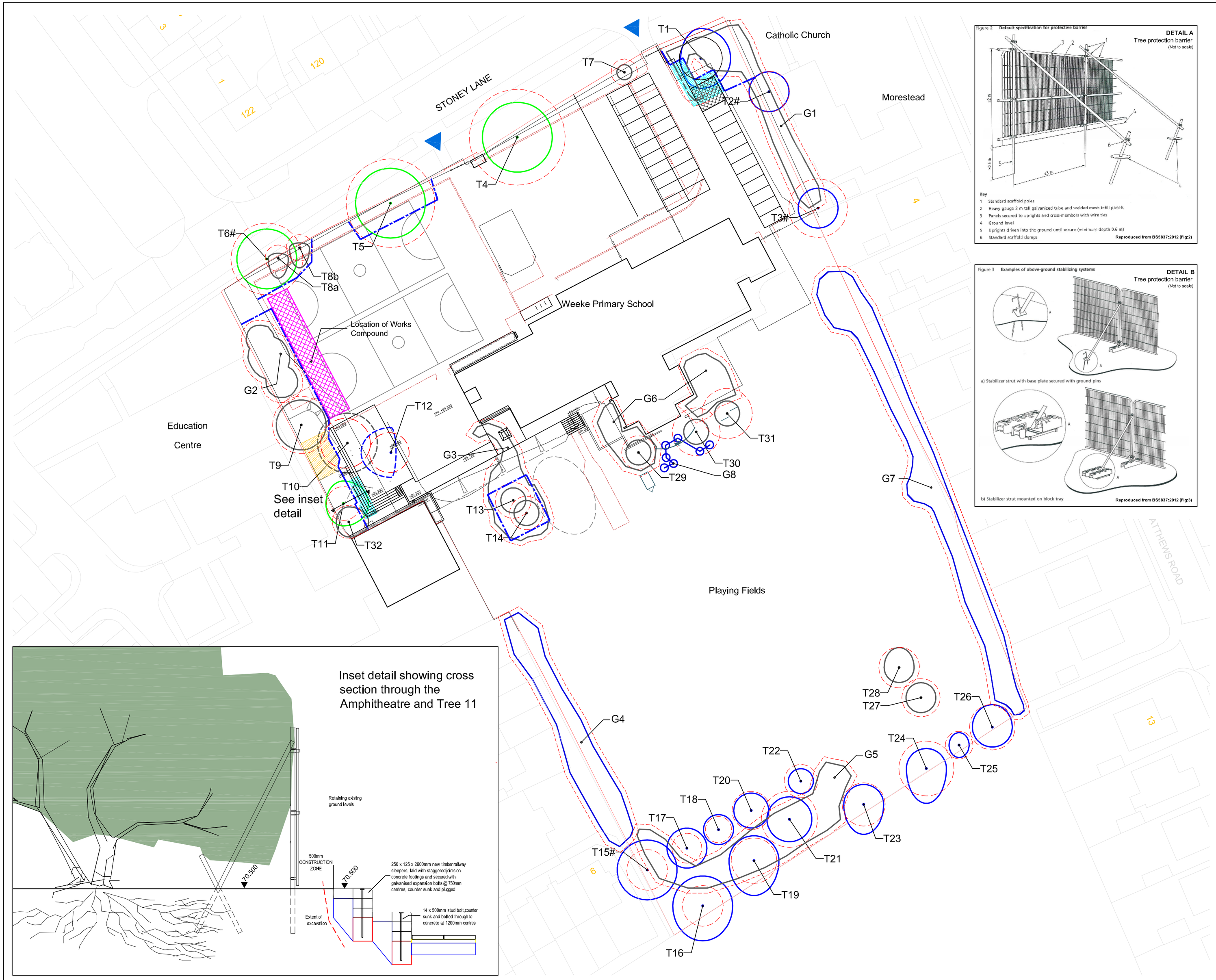

Figure 2 Default specification for protective barrier

DETAIL A
Tree protection barrier
(Not to scale)

Key
1 Standard scaffold poles
2 Heavy gauge 2 m tall galvanized tube and welded mesh infill panels
3 Panels secured to uprights and cross-members with wire ties
4 Ground level
5 Uprights driven into the ground until secure (minimum depth 0.6 m)
6 Standard scaffold clamps

Reproduced from BS5837:2012 (Fig:2)

Figure 3 Examples of above-ground stabilizing systems

DETAIL B
Tree protection barrier
(Not to scale)

Reproduced from BS5837:2012 (Fig:3)

Key

- Survey boundary.
- T1 — Tree with numbered reference. Canopy spread and BS5837:2012 tree quality category as shown below.
- T1# — Tree (in off-site or estimated location) with numbered reference. Canopy spread and BS5837:2012 tree quality category.
- G1 — Vegetation group with numbered reference. Canopy extents and BS5837:2012 tree quality category as shown below.
- H1 — Hedge with numbered reference. Width and BS5837:2012 tree quality category as shown below.

BS 5837:2012 Tree Quality Categories - Table 1

- Category A - High quality
- Category B - Moderate quality
- Category C - Low quality
- Category U - Unsuitable for retention

- Root protection area (RPA) Calculated in accordance with Section 4.6 - BS 5837:2012
- Area designated as potential site for structural landscaping.
- Tree to be removed with numbered reference. Canopy spread and BS5837:2012 tree quality category.
- Vegetation group or hedge to be removed with numbered reference. Canopy spread and BS5837:2012 tree quality category.
- Temporary protective fencing in accordance with Section 6.2 - BS 5837:2012. See inset details for example barriers.
- Excavation to be completed by hand , any required root pruning to be in accordance with BS 3998. Pruning of roots over 25mmØ to be monitored by arboriculturalist, with ongoing monitoring of trees condition by an aborficulturalist being recommended.
- Below ground construction in accordance with implementation principles in accordance with In BS5837:2012 & NJUG Vol4.

NOTES:

- Refer to RPS Tree Survey Report & Schedule for further details.
- Survey based on a visual inspection from the ground and is not intended as a full arboricultural inspection.
- Plan produced in accordance with recommendations set out in BS 5837:2012 - 'Trees in Relation to design, demolition and construction'.
- Due to the legal protection afforded to breeding birds vegetation removal should not take place during the bird nesting period generally, although not restricted to, March - August inclusive.
- Pedestrian/ vehicular emergency access routes to be maintained at all times.
- All protective fencing to be completed and approved by LPA / CA prior to commencement of any site works .
- All works to conform with requirements of:

BS 3998:2010 -	Tree Works
BS 5837:2012 -	Trees in relation to design, demolition and construction
NJUG 4 -	Guidelines for Utility Services in Proximity to Trees
APM 12 -	'Through the Trees to Development'

Rev	Description	Date	Initial	Checked
B	Addition of detail section	29.05.13	CC	NJ
A	Amendment to T11 & addition of T32	25.04.13	BK	CC

RPS

Lakesbury House, Hillingbury Road, Chandlers Ford, Hampshire. SO53 5SS

T: +44(0)2380 810 440 E: rpsso@rpsgroup.com F: +44(0)2380 810 449

N

Client: Hampshire County Council

Project: Weeke Primary School Winchester

Title: Tree Protection Plan

Status	Drawn By	PM/Checked by
Planning	SH	CC
Job Ref	Scale @ A2	Date Created
JSL2080	1:500	12/2012

Drawing Number	Rev
702	B

rpsgroup.com

APPENDIX 2

Tree Works

Tree #	Species	BS Category	Description of Works
10	Acer pseudoplatanus	Poor (C2)	Fell and grub out
12	London Plane	Moderate (B2)	Fell and grub out

APPENDIX 3

Tree Survey Schedule

JSL2080_750

RPS

Tree survey schedule

Site: Weeke Primary School | Revision: A | Dwg Reference: JSL2080_700 | Surveyor: CC

Project / Schedule Ref: JSL2080_750 | Status: . | Date of survey: 20/11/12/ 25/04/13

Ref No:	Species	Height (m)	Crown spread (m)				Stem diameter	Stem No. @ 1.5m	Height of crown clearance (m)	Life stage	Structural / Physiological condition	General observations / Management recommendations	Estimated remaining contribution (years)	Tree Quality Category (BS5837)
			N	E	S	W								
1	*Quercus robur* English Oak	12	6.0	6.0	6.0	4.0	0.36	1	3	EM	Fair	Ivy into lower crown, fair development, slightly suppressed to the west.	+25	B2
2#	*Tilia sp.* Lime	4	4.0	4.0	4.0	4.0	0.34	1	3	EM	Fair	Offsite tree, appears to be in good general condition.	+25	B2
3#	*Acer pseudoplatanus* Sycamore	10	4.0	4.0	4.0	4.0	0.20	6	3	EM	Fair	Off site tree, typically vigorous.	+20	B2
4	*Acer saccharum* Sugar Maple	16	7.0	7.0	7.0	7.0	0.80	1	4	M	Fair	Large, well formed itree n an open situation with a well balanced wide crown. Root flare appears to be greatly enlarged.	+25	A2
5	*Acer saccharum* Sugar Maple	16	7.0	7.0	7.0	7.0	0.74	1	4	M	Fair	Root flare/plate is enlarged. With T4 has considerable presence to the immediate school grounds and the wider street scene.	+25	A2
6#	*Tilia sp.* Lime	17	6.0	6.0	6.0	6.0	0.60	1	5	M	Fair	Offsite tree, minor deadwood in crown.	+20	A2
7	*Crataegus monogyna* Hawthorn	6	1.5	1.5	1.5	1.5	0.22	1	-	M	Fair	Next to the main entrance.	+15	C2
8a	*Prunus cerasifera 'Pissardii'* Purple Plum	5	1.0	2.0	4.0	2.0	0.22	1	-	M	Fair/Poor	Heavily suppressed by T6, insignificant.	-10	C2
8b	*Prunus cerasifera 'Pissardii'* Purple Plum	6	1.0	2.0	4.0	2.0	0.22	1	-	M	Fair/Poor	Poor, scrappy form.	-10	C2
9	*Carpinus betula* Hornbeam	12	5.0	5.0	5.0	5.0	0.48	1	3	EM	Fair	Typical crown to species, well balanced, slightly fluted form.	+20	C2
10	*Acer platanoides* Norway Maple	13	6.0	6.0	6.0	6.0	0.45	1	3	EM	Fair	In slightly raised area.	+20	C2
11	*Arbutus unedo* Strawberry Tree	7	4.5	5.0	4.5	3.5	0.10	8	-	M	Fair	Low, wide spreading crown with numerous limbs. An excellent specimen.	+25	A2
12	*Platanus x acerifolia* London Plane	16	5.0	1.0	5.0	6.0	0.28	1	3	EM	Fair	Suppressed on eastern side, established in raised area, shrubbery.	+20	B2
13	*Prunus avium* Wild Cherry	14	2.5	2.5	2.5	2.5	0.30	1	2	OM	Fair/Poor	Over mature. In shrubbery.	-15	C2

Note: This survey is based on a brief visual inspection from the ground.
It is not intended as a full arboricultural inspection.
- Indicates estimated / offsite tree

Tree survey schedule

Site: Weeke Primary School | Revision: A | Dwg Reference: JSL2080_700 | Surveyor: CC

Project / Schedule Ref: JSL2080_750 | Status: . | Date of survey: 20/11/12/ 25/04/13

Ref No:	Species	Height (m)	Crown spread (m)				Stem diameter	Stem No. @ 1.5m	Height of crown clearance (m)	Life stage	Structural / Physiological condition	General observations / Management recommendations	Estimated remaining contribution (years)	Tree Quality Category (BS5837)
			N	E	S	W								
14	*Prunus avium* Wild Cherry	14	2.5	2.5	2.5	2.5	0.28	1	2	OM	Fair/Poor	Over mature. In shrubbery.	-15	C2
15#	*Fraxinus excelsior* Common Ash	17	6.0	6.0	6.0	6.0	0.34	1	4	M	Fair	Tree is part of a southern buffer woodland grouping which acts as a screen between the school playing fields and the park beyond.	+25	B2
16	*Fraxinus excelsior* Common Ash	17	6.0	6.0	7.0	6.0	0.34	1	4	M	Fair	Tree is part of a southern buffer woodland grouping which acts as a screen between the school playing fields and the park beyond.	+25	B2
17	*Fagus sylvatica* Common Beech	16	4.0	4.0	4.0	4.0	0.25	1	4	M	Fair	Tree is part of a southern buffer woodland grouping which acts as a screen between the school playing fields and the park beyond.	+25	B2
18	*Acer platanoides* Norway Maple	13	3.0	3.0	3.0	3.0	0.22	1	4	M	Fair	Tree is part of a southern buffer woodland grouping which acts as a screen between the school playing fields and the park beyond.	+25	B2
19	*Fraxinus excelsior* Common Ash	17	5.0	5.0	7.0	5.0	0.38	1	4	M	Fair	Tree is part of a southern buffer woodland grouping which acts as a screen between the school playing fields and the park beyond.	+25	B2
20	*Juglans regia* Common Walnut	9	3.5	3.5	3.5	3.5	0.32	1	2	EM	Fair	Slightly unusual in a stand generally dominated by native trees.	+25	B2
21	*Acer platanoides* Norway Maple	12	4.5	4.5	4.5	4.5	0.47	1	3	EM	Fair	In fair general condition.	+25	B2
22	*Juglans regia* Common Walnut	9	2.5	2.5	2.5	2.5	0.28	1	2	EM	Fair	Likely established at the same time as T20.	+25	B2
23	*Aesculus hippocastanum* Horse Chestnut	13	4.5	4.0	6.0	4.0	0.36	1	3	M	Fair	Significant part f the tree group.	+25	B2
24	*Acer pseudoplatanus* Sycamore	16	4.0	4.0	7.0	4.0	0.46	1	3	M	Fair	Part of the group provides a buffer to the south of the site,	+25	B2
25	*Acer pseudoplatanus* Sycamore	11	2.5	2.0	2.5	2.0	0.23	1	2	M	Fair	Suppressed.	+15	B2
26	*Acer pseudoplatanus* Sycamore	15	.4.5	4.0	4.0	4.0	ave 0.22	3	1	EM	Fair	Large multi-trunked tree on south-west boundary.	+25	B2
27	*Prunus avium* Wild Cherry	10	3.0	3.0	3.0	3.0	0.32	1	1	EM	Fair	In grassed area, fronting the group.	+20	C2

Note: This survey is based on a brief visual inspection from the ground.
It is not intended as a full arboricultural inspection.
- Indicates estimated / offsite tree

Tree survey schedule

Site: Weeke Primary School | Revision: A | Dwg Reference: JSL2080_700 | Surveyor: CC

Project / Schedule Ref: JSL2080_750 | Status: . | Date of survey: 20/11/12/ 25/04/13

Ref No:	Species	Height (m)	Crown spread (m)				Stem diameter	Stem No. @ 1.5m	Height of crown clearance (m)	Life stage	Structural / Physiological condition	General observations / Management recommendations	Estimated remaining contribution (years)	Tree Quality Category (BS5837)
			N	E	S	W								
28	*Aesculus hippocastanum* Horse Chestnut	11	4.0	3.0	3.0	3.0	0.34	1	1	EM	Fair	In fair general condition.	+20	C2
29	*Prunus avium* Wild Cherry	12	2.5	2.5	2.5	2.5	0.28	1	2	EM	Fair	Established within Hazel coppice.	+20	C2
30	*Prunus avium* Wild Cherry	11	2.5	2.5	2.5	2.5	0.40	1	2	EM	Fair	Established within Hazel coppice.	+20	C2
31	*Prunus avium* Wild Cherry	12	2.5	2.5	2.5	2.5	0.42	1	2	EM	Fair	Established within Hazel coppice.	+20	C2
32	*Fraxinus excelsior* Common Ash	9	3.0	4.0	3.0	2.5	0.18,0.21	2	2	EM	Fair	Established tight against fence to the rear of the Strawbarry Tree. Typically vigerous.	+20	C2
G1	*Ilex aquifolium, Sambucus nigra, Carpinus betulus, Quercus ro* Common Holly, Elder, Hornbeam, English Oak	>6	-	-	-	-	-	-	-	EM	Fair	Mixed boundary to eastern side of site partially maintained as hedge and out grown remnant with regeneration. Standing dead Oak in stand.	+15	C2
G2	*Laurus nobilis, Thuja plicat* Bay Laurel, Western Red Cedar	>9	-	-	-	-	-	-	-	M	Fair	Evergreen boundary group. Landscape buffer. The Western Red Cedar dominates.	+15	C2
G3	*Corylus avellana* Common Hazel	4	-	-	-	-	-	-	-	EM	Fair	Consists grown out shrubby coppice under Cherry trees.	+15	B2
G4	*Corylus avellana, Ilex aquifolium, Cornus sanguinea* Common Hazel, Common Holly, Common Dogwood	3.5	-	-	-	-	-	-	-	EM	Fair	Mixed hedge.	+15	B2
G5	*Ilex aquifolium, Corylus avellana, Quercus robur* Common Holly, Common Hazel, English Oak	6	-	-	-	-	-	-	-	EM	Fair	Under-mid-storey between larger climax species.	+15	C2
G6	*Corylus avellana* Common Hazel	4	-	-	-	-	-	-	-	EM	Fair	Hazel, grown out coppice provides a partial screen and enclosure to the play area.	+15	C2
G7	*Corylus avellana, Ilex aquifolium, Cornus sanguinea* Common Hazel, Common Holly, Common Dogwood	4	-	-	-	-	-	-	-	EM	Fair	Out grown hedge with occasional large tree within the line.	+20	B2
G8	*Fraxinus excelsior, Acer campestre* Common Ash, Field Maple	3	1.6	1.6	1.6	1.6	0.18	-	-	Y	Fair/Good	Recently planted standard trees in grass.	+15	C2

Note: This survey is based on a brief visual inspection from the ground.
It is not intended as a full arboricultural inspection.
- Indicates estimated / offsite tree

APPENDIX 4

Example Tree Protection Barrier (BS5837:2012 Fig 2 & 3)

Figure 2 **Default specification for protective barrier**

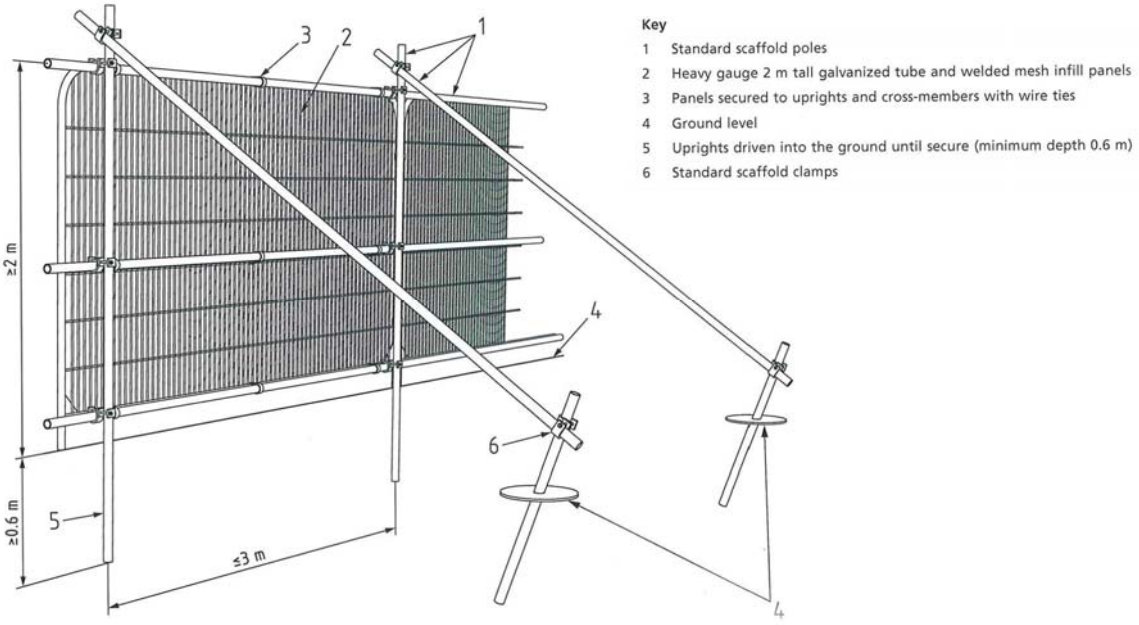

Figure 3 **Examples of above-ground stabilizing systems**

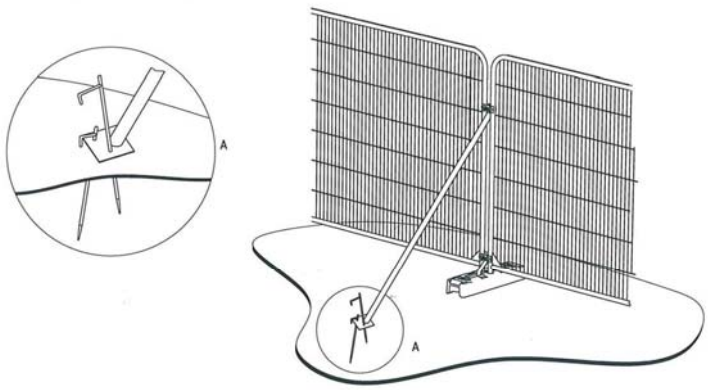

a) Stabilizer strut with base plate secured with ground pins

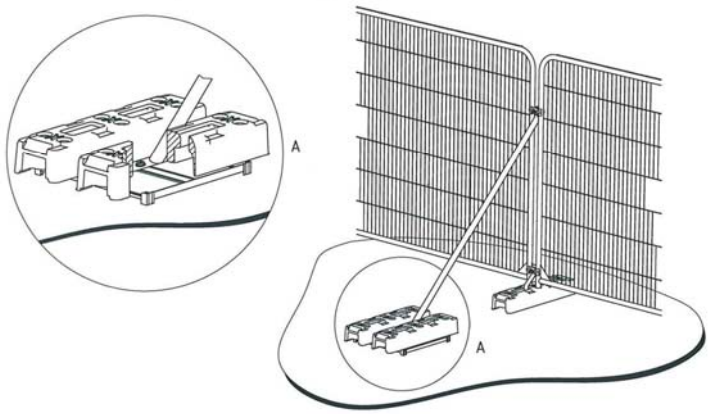

b) Stabilizer strut mounted on block tray

APPENDIX 5

Arboricultural site register

(Example template only)

ARBORICULTURAL SITE REPORT

PROJECT:	**SITE CONTACT:**	**REPORT NO:**
XXX, XX Street, XXX Town	*Mr XXX*	*001*
INSPECTION COMPLETED BY:	**DATE AND TIME:**	**SHEET:**
Mr XXX	*XXX*	*X OF X*

ITEM	**LOCATION**	**NOTES / RECOMMENDATIONS**	**ACTION**
1	*E.g. Adjacent to T999, north of building*	*E.g. Damaged fence, materials spilled into RPA, further inspection requirements, damage to tree*	*E.g. Reinstate fencing, make good levels with topsoil*
2			
3			

CIRCULATION:
Mr XXX
Mr XXX

APPENDIX 6

Construction Exclusion Zone (CEZ) Signage

PROTECTIVE FENCING. THIS FENCING MUST BE MAINTAINED IN ACCORDANCE WITH THE APPROVED PLANS AND DRAWINGS FOR THIS DEVELOPMENT.

TREE PROTECTION AREA

KEEP OUT !

(TOWN & COUNTRY PLANNING ACT 1990)

TREES ENCLOSED BY THIS FENCE ARE PROTECTED BY PLANNING CONDITIONS AND/OR ARE THE SUBJECTS OF A TREE PRESERVATION ORDER.

CONTRAVENTION OF A TREE PRESERVATION ORDER MAY LEAD TO CRIMINAL PROSECUTION

ANY INCURSION INTO THE PROTECTED AREA MUST BE WITH THE WRITTEN PERMISSION OF THE LOCAL PLANNING AUTHORITY